ASSEMBLY INSTRUCTION

①

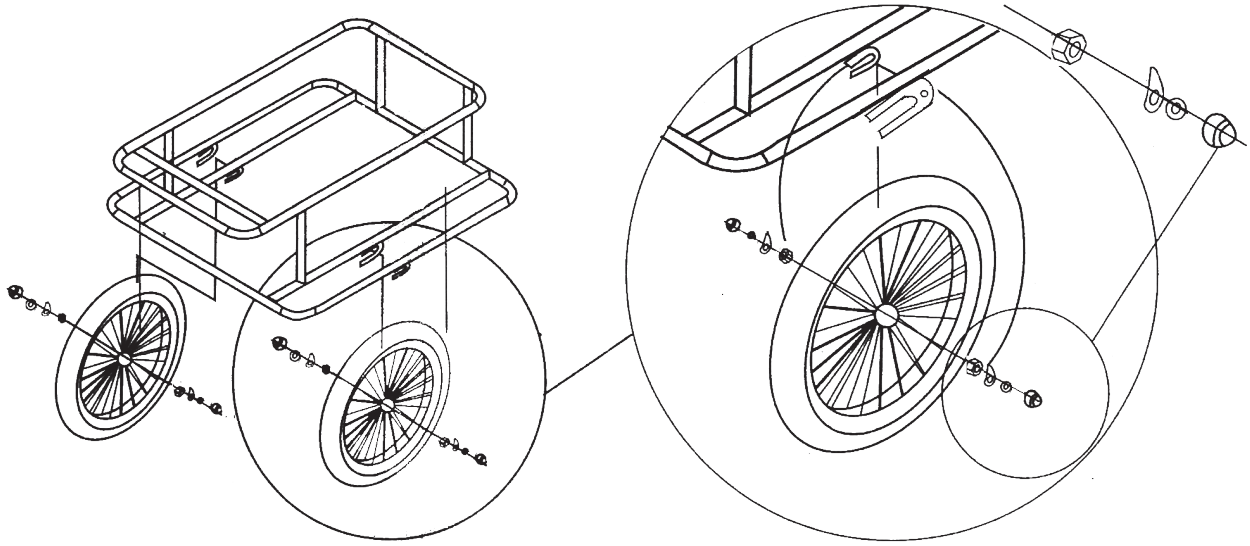

②

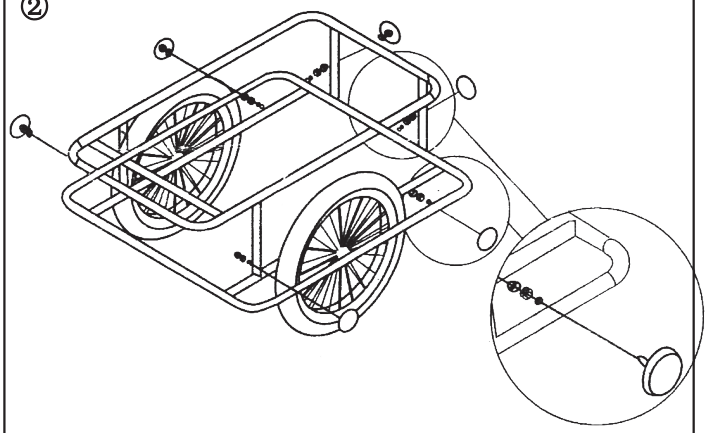

③

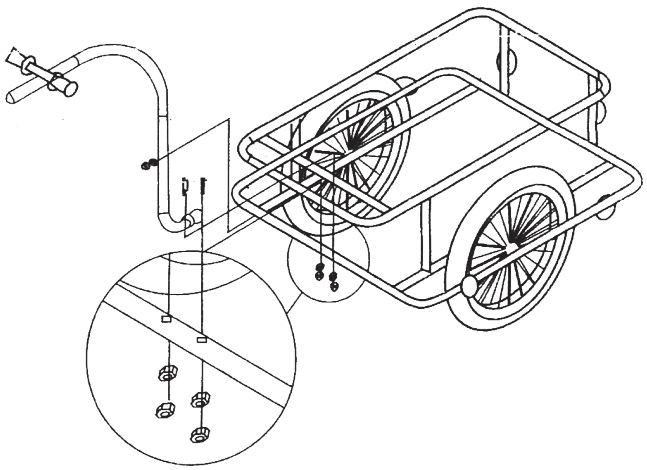

④

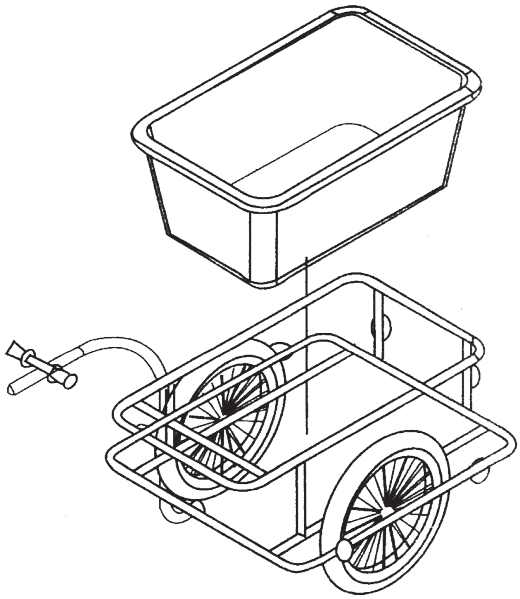
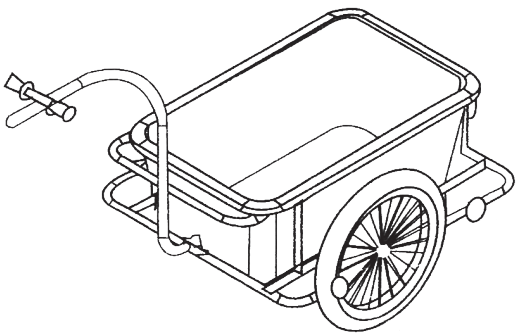
⑤